APPROVED BY _____ DATE _____ PAINT CODE = Z1 OXFORD WHITE

REVISIONS			
REV.	DESCRIPTION	DATE	APRVD

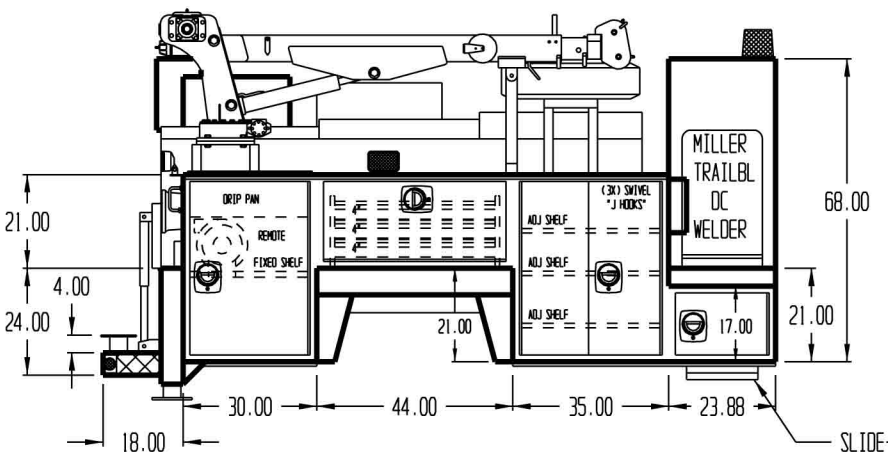

12 VOLT JUMP START PLUG LOCATED IN THE FRONT OF THE CHASSIS BUMPER

EXTERIOR FLOOD LIGHT RECEPTACLE ON THE FRONT OF C.S. & S.S. COMPARTMENTS.

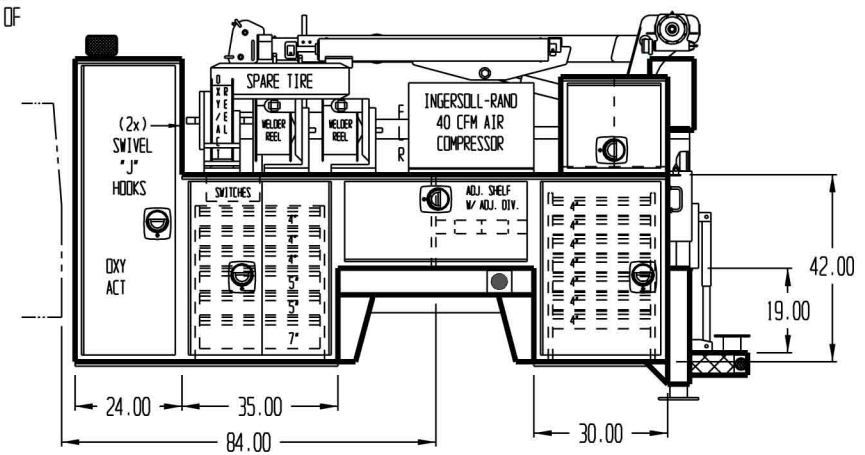

NOTE: 3-SECTION CENTER DECK SLIDE-TOP WITH REAR FOLD UP DOOR
SLIDE-TOP IS TO BE ON A 8" RISER OFF THE COMPARTMENTS

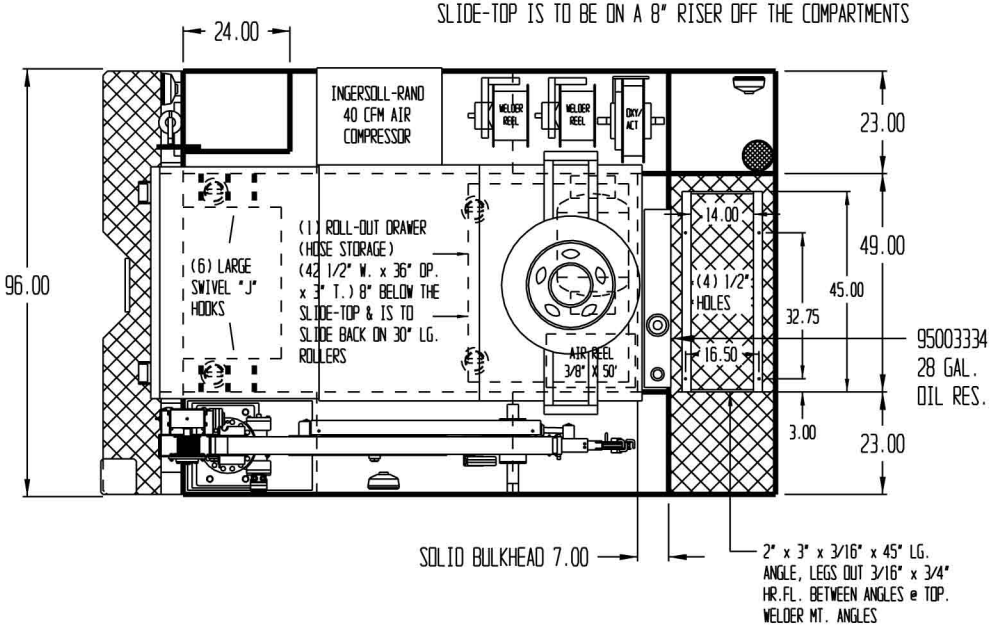

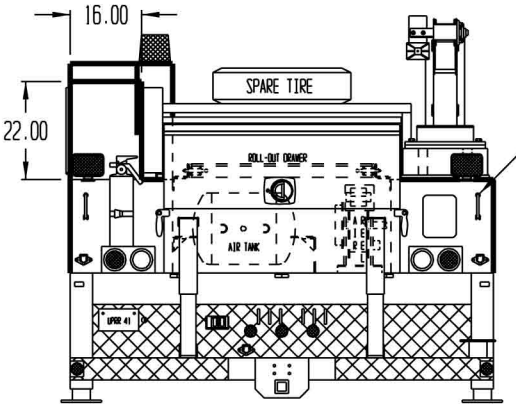

MASTER LOCK OUT SS & CS REAR COMPARTMENTS

NOTE: INTERIOR STRIP LIGHTS
(3) 36" SS 2, 4 & CS 2.
(8) 12" (2 EACH) SS 3, CS 3 & 4.
(1 EACH) C.S. 1 & S.S. BOOK BOX

NOTE: LINE-X WELDER PLATFORM AND REAR STEP BUMPER SURFACE

PLEASE REPORT ANY ERRORS FOUND ON THIS PRINT

THIS PRINT CONTAINS CONFIDENTIAL INFORMATION AND IS THE SOLE PROPERTY OF MAINTAINER CORP. OF IOWA INC. AND IS NOT TO BE COPIED OR REPRODUCED WITHOUT THE EXPRESSED WRITTEN PERMISSION OF MAINTAINER CORP. OF IOWA INC.

PROPRIETARY DATA PROPERTY OF MAINTAINER CORPORATION OF IOWA, INC.

COPYRIGHT © 2002

UOS DIMENSIONS ARE IN INCHES
GENERAL TOLERANCES

BREAK ALL EDGES .01 X 45°	ANGULAR ± 1° .XX ± .03 .XXX ± .005
UOS RADII	UOS ANGLES

MADE IN THE USA

MATERIAL:

SCALE: SIZE: B

DRAWING NUMBER: V202 - V205

DFTM. STZ DATE: 2-19-05

1115ST-1-084

Maintainer
Corporation of Iowa, Inc.
P.O. Box 349 1701 S. 2nd Avenue
Sheldon, Iowa 51201